Interfacing the PCD8584 I²C-bus controller to 80C51 family microcontrollers

AN425

DESCRIPTION

This application note shows how to use the PCD8584 I²C-bus controller with 80C51 family microcontrollers. One typical way of connecting the PCD8584 to an 80C31 is shown. Some basic software routines are described showing how to transmit and receive bytes in a single master system. An example is given of how to use these routines in an application that makes use of the I²C circuits on an I²C demonstration board.

The PCD8584 is used to interface between parallel microprocessor or microcontroller buses and the serial I²C bus. For a description of the I²C bus protocol refer to the I²C bus specification which is printed in the microcontroller user guide.

The PCD8584 controls the transmission and reception of data on the I²C bus, arbitration, clock speeds and transmission and reception of data on the parallel bus. The parallel bus is compatible with 80C51, 68000, 8085 and Z80 buses. Communication with the I²C-bus can be done on an interrupt or polled basis. This application note focuses on interfacing with 8051 microcontrollers in single master systems.

PCD8584

In Figure 1, a block diagram is shown of the PCD8584. Basically it consists of an I²C-interface similar to the one used in 84Cxx family microcontrollers, and a control block for interfacing to the microcontroller.

The control block can automatically determine whether the control signals are from 80xx or 68xxx type of microcontrollers.

This is determined after the first write action from the microcontroller to the PCD-8584. The control block also contains a programmable divider which allows the selection of different PCD8584 and I²C clocks.

The I²C interface contains several registers which can be written and read by the microcontroller.

S1 is the control/status register. This register is accessed while the A0 input is 1. The meaning of the bits depends on whether the register is written to or read from. When used as a single master system the following bits are important:

PIN: Interrupt bit. This bit is made active when a byte is sent/received to/from the I²C-bus. When ENI is made active, PIN also controls the external INT line to interrupt the microcontroller.

ES0-ES2: These bits are used as pointer for addressing S0, S0', S2 and S3. Setting ES0 also enables the Serial I/O.

ENI: Enable Interrupt bit. Setting this bit enables the generation of interrupts on the INT line.

STA, STO: These bits allow the generation of START or STOP conditions.

ACK: With this bit set and the PCD8584 is in master/receiver mode, no acknowledge is generated by the PCD8584. The slave/transmitter now knows that no more data must be sent to the I²C-bus.

BER: This bit may be read to check if bus errors have occurred.

BB: This bit may be read to check whether the bus is free for I²C-bus transmission.

S2 is the clock register. It is addressed when A0 = 0 and ES0-ES2 = 010 in the previous write cycle to S1. With the bits S24-S20 it is possible to select 5 input clock frequencies and 4 I²C clock frequencies.

S3 is the interrupt vector register. It is addressed when A0 = 0 and ES0-ES2 = 001 in the previous write cycle to S1. This register is not used when an 80C51 family microcontroller is used. An 80C51 microcontroller has fixed interrupt vector addresses.

S0' is the own address register. It is addressed when A0 = 0 and ES0-ES2 = 000. This register contains the slave address of the PCD8584. In the single master system described here, this register has no functional use. However, by writing a value to S0', the PCD8584 determines whether an 80Cxx or 68xxx type microcontroller is the controlling microcontroller by looking at the $\overline{CS}$ and $\overline{WR}$ lines. So independent of whether the PCD8584 is used as master or slave, the microcontroller should always first write a value to S0' after reset.

S0 is the I²C data register. It is addressed when A0 = 0 and ES0-ES2 = 1x0. Transmission of a byte on the I²C bus is done by writing this byte to S0. When the transmission is finished, the PIN bit in S1 is reset and if ENI is set, an interrupt will be generated. Reception of a byte is signaled by resetting PIN and by generating an interrupt if ENI is set. The received byte can be read from S0.

The SDA and SCL lines have no protection diodes to V_{DD}. This is important for multimaster systems. A system with a PCD8584 can now be switched off without causing the I²C-bus to hang-up. Other masters still can use the bus.

For more information of the PCD8584 refer to the data sheet.

PCD8584/8031 Hardware Interface

Figure 2 shows a minimum system with an 8051 family controller and a PCD8584. In this example, an 80C31 is used. However any 80C51 family controller with external addressing capability can be used.

The software resides in EPROM U3. For addressing this device, latch U2 is necessary to demultiplex the lower address bits from the data bits. The PCD8584 is mapped in the external data memory area. It is selected when A1 = 0. Because in this example no external RAM or other mapped peripherals are used, no extra address decoding components are necessary. A0 is used by the PCD8584 for proper register selection in the PCD8584.

U5A is an inverter with Schmitt trigger input and is used to buffer the oscillator signal of the microcontroller. Without buffering, the rise and fall time specifications of the CLK signal are not met. It is also important that the CLK signal has a duty cycle of 50%. If this is not possible with certain resonators or microcontrollers, then an extra flip-flop may me necessary to obtain the correct duty cycle.

U5C and U5D are used to generate the proper reset signals for the microcontroller and the PCD8584.

Interfacing the PCD8584 I²C-bus controller to 80C51 family microcontrollers

AN425

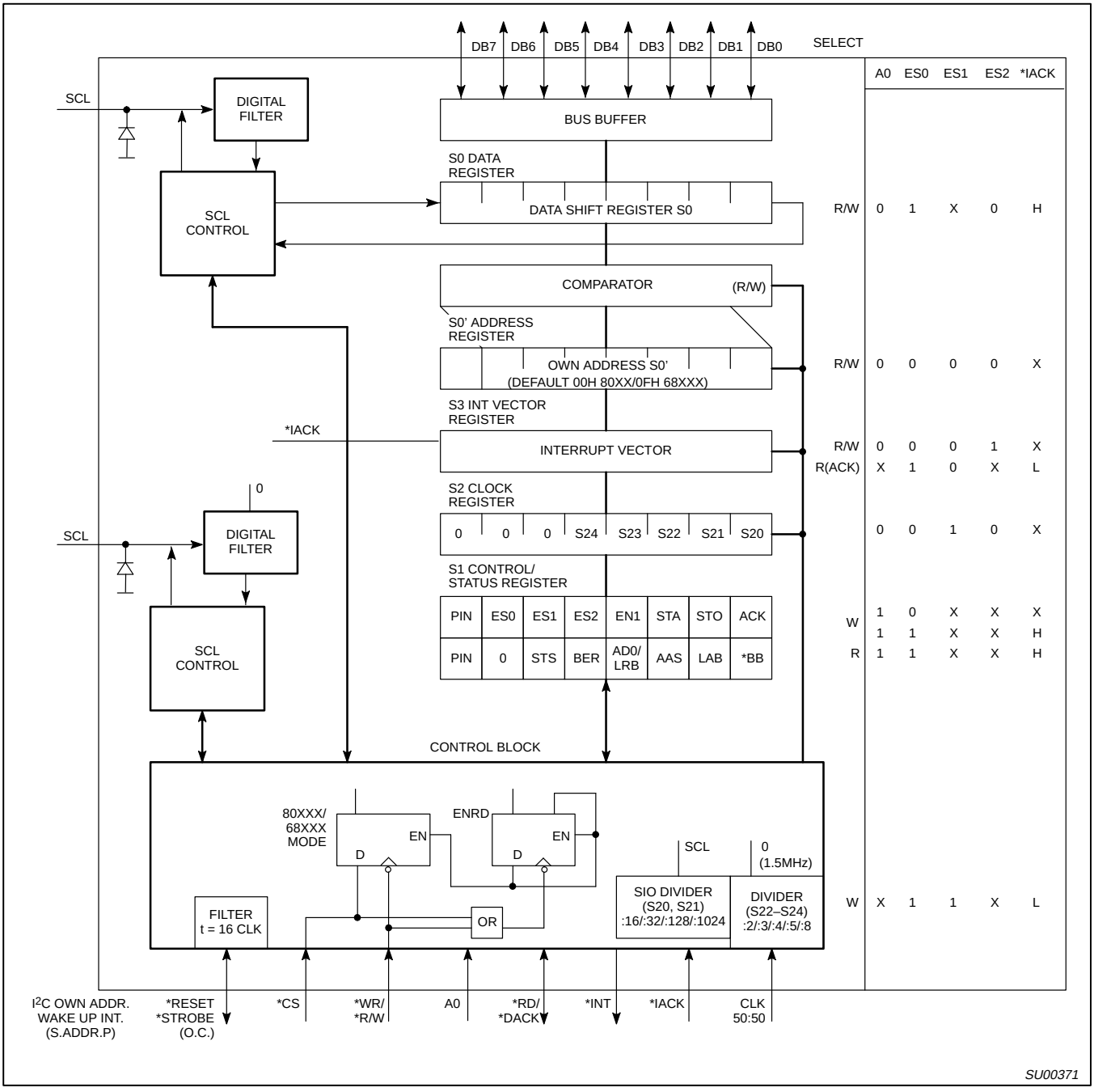

Figure 1. PCD8584 Block Diagram

Interfacing the PCD8584 I²C-bus controller to 80C51 family microcontrollers

AN425

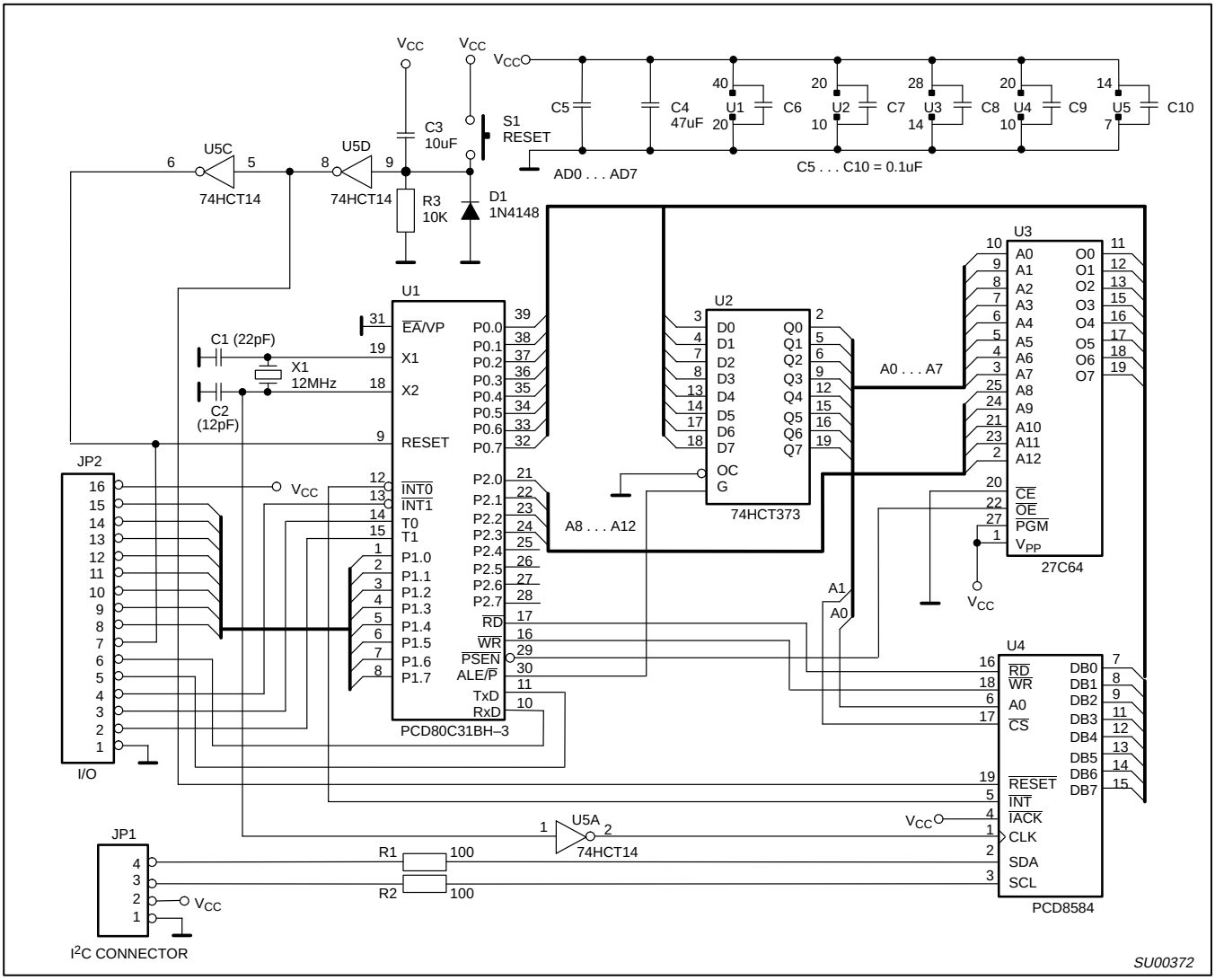

Figure 2. PCD8584 to 80C31 Interface

Basic PCD8584/8031 Driver Routines

In the listing section (page 5), some basic routines are shown. The routines are divided in two modules. The module ROUTINE contains the driver routines and initialization of the PCD8584. The module INTERR contains the interrupt handler. These modules may be linked to a module with the user program that uses the routines in INTERR and ROUTINE. In this application note, this module will be called USER. A description of ROUTINE and INTERR follows.

Module ROUTINE

Routine Sendbyte (Lines 17-20)—
This routine sends the contents of the accumulator to the PCD8584. The address is such that A0 = 0. Which register is accessed depends on the contents of ES0-ES2 of the control register. The address of the PCD8584 is in variable 'PCD8584'. This must have been previously defined in the user program. The DPTR is used as a pointer for addressing the peripheral. If the address is less than 255, then R0 or R1 may be used as the address pointer.

Routine Sendcontr (Lines 25, 26)—
This routine is similar to Sendbyte, except that now A0 = 1. This means that the contents of the accumulator are sent to the control register S1 in the PCD8584.

Routine Readbyte (Lines 30-33)—
This routine reads a register in the PCD8584 with A0 = 0. Which register depends on ES0-ES2 of the control register. The result of the read operation is returned in the accumulator.

Routine Readcontr (Lines 37-39)—
This routine is similar to Readbyte, except that now A0 = 1. This means that the accumulator will contain the value of status register S1 of the PCD8584.

Routine Start Lines (44-56)—
This routine generates a START-condition and the slave address with a R/W bit. In line 44, the variable IIC_CNT is reset. This variable is used as a byte counter to keep track of the number of bytes that are received or transmitted. IIC_CNT is defined in module INTERR.

Lines 45-46 increment the variable NR_BYTES if the PCD8584 must receive data. NR_BYTES is a variable that indicates how many bytes have to be received or transmitted. It must be given the correct value in the USER module. Receiving or transmitting is distinguished by the value of

the DIR bit. This must also be given the correct value in the USER module.

Then the status register of PCD8584 must be read to check if the I²C bus is free. First the status register must be addressed by giving ES0-ES2 of the control register the correct value (lines 47-48). Then the Bus Busy bit is tested until the bus is free (lines 49-50). If this is the case, the slave address is sent to data register S0 and the I2C_END bit is cleared (lines 51-53). The slave address is set by the user program in variable USER. The LSB of the slave address is the R/W bit. I2C_END can be tested by the user program whether an I2C reception/transmission is in progress or not.

Next the START condition will be generated and interrupt generation enabled by setting the appropriate bits in control register S1. (lines 54-55).

Now the routine will return back to the user program and other tasks may be performed. When the START condition, slave address and R/W bit are sent, and the ACK is received, the PCD8584 will generate an interrupt. The interrupt routine will determine if more bytes have to be received or transmitted.

Routine Stop (Lines 59-62) —
Calling this routine, a STOP condition will be sent to the I²C bus. This is done by sending the correct value to control register S1 (lines 59-61). After this the I2C_END bit is set, to indicate to the user program that a complete I²C sequence has been received or transmitted.

Routine I2C_Init (Lines 65-76)—
This routine initializes the PCD8584. This must be done directly after reset. Lines 67-70 write data to 'own address' register S0'. First the correct address of S0' is set in control register S1 (lines 67-68), then the correct value is written to it (lines 69-70). The value for S0' is in variable SLAVE_ADR and set by the user program. As noted previously, register S0' must always be the first register to be accessed after reset, because the PCD8584 now determines whether an 80Cxxx or 68xxx microcontroller is connected. Lines 72-76 set the clock register S2. The variable I2C_CLOCK is also set by the user program.

Module INTERR
This module contains the I²C interrupt routine. This routine is called every time a byte is received or transmitted on the I²C bus. In lines 12-15 RAM space for variables is reserved.

BASE is the start address in the internal 80C51 RAM where the data is stored that is received, or where the data is stored that has to be transmitted.

NR_BYTES, IIC_CNT and SLAVE were explained earlier. I2C_END and DIR are flags that are used in the program. I2C_END indicates whether an I²C transmission or reception is in progress. DIR indicates whether the PCD8584 has to receive or transmit bytes. The interrupt routine makes use of register bank 1.

The transmission part of the routine starts at line 42. In lines 42-43, a check is made whether IIC_CNT = NR_BYTES. If true, all bytes are sent and a STOP condition may be generated (lines 44-45).

Next the pointer for the internal RAM is restored (line 46) and the byte to be transmitted is fetched from the internal RAM (line 47). Then this byte is sent to the PCD8584 and the variables are updated (lines 47-49). The interrupt routine is left and the user program may proceed. The receive part starts from line 55. First a check is made if the next byte to be received is the last byte (lines 56-59). If true the ACK must be disabled when the last byte is received. This is accomplished by resetting the ACK bit in the control register S1 (lines 60-61).

Next the received byte may be read (line 62) from data register S0. The byte will be temporary stored in R4 (line 63). Then a check is made if this interrupt was the first after a START condition. If so, the byte read has no meaning and the interrupt routine will be left (lines 68-70). However by reading the data register S0 the next read cycle is started.

If valid data is received, it will be stored in the internal RAM addressed by the value of BASE (lines 71-73). Finally a check is made if all bytes are received. If true, a STOP condition will be sent (lines 75-78).

EXAMPLES
In the listing section (starting on page 8), some examples are shown that make use of the routines described before. The examples are transmission of a sequence, reception of I²C data and an example that combines both.

The first example sends bytes to the PCD8577 LCD driver on the OM1016 demonstration board. Lines 7 to 10 define the interface with the other modules and should be included in every user program. Lines 14 to 16 define the segments in the user module. It is completely up to the user how to organize this.

Lines 24 and 28 are the reset and interrupt vectors. The actual user program starts at line 33. Here three variables are defined that are used in the I²C driver routines. Note that PCD8584 must be an even address, otherwise the wrong internal registers will be accessed! Lines 37-42 initialize the interrupt logic of the microcontroller. Next the PCD8584 will be initialized (line 45).

The PCD8584 is now ready to transmit data. A table is made in the routine at line 61. For the PCD8577, the data is a control byte and the segment data. Note that the table does not contain the slave address of the LCD driver. In lines 51-54, variables are made ready to start the transmission. This consists of defining the direction of the transmission (DIR), the address where the data table starts (BASE), the number of bytes to transmit (NR_BYTES, without slave address!) and the slave address (SLAVE) of the I²C peripheral that has to be accessed.

In line 55 the transmission is started. Once the I²C transmission is started, the user program can do other tasks because the transmission works on interrupts. In this example a loop is performed (line 58). The user can check the end of the transmission during the other tasks, by testing the I2C_END bit regularly.

The second example program receives 2 bytes from the PCF8574P I/O expander on the OM1016 demonstration board. Until line 45 the program is identical to the transmit routine because it consists of initialization and variable definition. From line 48, the variables are set for I²C reception. The received bytes are stored in RAM area from label TABLE. During reception, the user program can do other tasks. By testing the I2C_END bit the user can determine when to start processing the data in the TABLE.

The third example program displays time from the PCF8583P clock/calendar/RAM on the LCD display driven by the PCF8577. The LED display (driven by SAA1064) shows the value of the analog inputs of the A/D converter PCF8591. The four analog inputs are scanned consecutively.

In this example, both transmit and receive sequences are implemented as shown in the previous examples. The main clock part is from lines 62-128. This contains the calls to the I²C routines. From lines 135-160, routines are shown that prepare the data to be transmitted. Lines 171 to 232 are the main program for the AD converter and LED display. Lines 239 to 340 contain routines used by the main program. This demo program can also be used with the I²C peripherals on the OM1016 demonstration board.

```
ASM51  TSW  ASSEMBLER   Routines for PCD8584

LOC   OBJ         LINE  SOURCE

                     1  $TITLE (Routines for PCD8584)
                     2  $PAGELENGTH(40)
                     3  ;Program written for PCD8584 as master
                     4  ;
                     5          PUBLIC READBYTE,READCONTR,SENDBYTE
                                PUBLIC SENDCONTR,START,STOP
                     6          PUBLIC I2C_INIT
                     7          EXTRN  BIT(I2C_END,DIR)
                     8          EXTRN  DATA(SLAVE,IIC_CNT,NR_BYTES)
                     9          EXTRN  NUMBER(SLAVE_ADR,I2C_CLOCK,PCD8584)
                    10  ;
                    11  ;Define code segment
                    12  ROUTINE   SEGMENT CODE
----                13            RSEG    ROUTINE
                    14  ;
                    15  ;SENDBYTE sends a byte to PCD8584 with A0=0
                    16  ;Byte to be send must be in accu
0000:          R    17  SENDBYTE:
0000: 900000   R    18          MOV DPTR,#PCD8584 ;Register address
0003: F0            19  SEND:   MOVX @DPTR,A    ;Send byte
0004: 22            20          RET
                    21  ;
                    22  ;SENDCONTR sends a byte to PCD8584 with A0=1
                    23  ;Byte to be send must be in accu
0005:               24  SENDCONTR:
0005: 900001   R    25          MOV DPTR,#PCD8584+01H ;Register address
0008: 80F9          26          JMP SEND
                    27  ;
                    28  ;READBYTE reads a byte from PCD8584 with A0=0
                    29  ;Received byte is stored in accu
000A:               30  READBYTE:
000A: 900000   R    31          MOV DPTR,#PCD8584 ;Register address
000D: E0            32  REC:    MOVX A,@DPTR    ;Receive byte
000E: 22            33          RET
                    34  ;
                    35  ;READCONTR reads a byte from PCD8584 with A0=1
                    36  ;Received byte is stored in accu
000F:               37  READCONTR:
000F: 900001   R    38          MOV DPTR,#PCD8584+01H ;Register address
0012: 80F9          39          JMP REC
                    40  ;
                    41  ;START tests if the I2C bus is ready. If ready a
                    42  ;START-condition will be sent, interrupt generation
                    43  ;and acknowledge will be enabled.
0014: 750000   R    44  START:  MOV IIC_CNT,#00 ;Clear  I2C byte counter
0017: 200002   R    45          JB DIR,PROCEED  ;If DIR is 'receive' then
001A: 0500     R    46          INC NR_BYTES    ;increment NR_BYTES
001C: 7440          47  PROCEED:MOV A,#40H      ; Read STATUS register of
                                                ; 8584
001E: 120005   R    48          CALL SENDCONTR
0021: 12000F   R    49  TESTBB: CALL READCONTR
0024: 30E0FA        50          JNB ACC.0,TESTBB; Test BB/ bit
0027: E500     R    51          MOV A,SLAVE
0029: C200     R    52          CLR I2C_END     ;Reset I2C ready bit
002B: 120000   R    53          CALL SENDBYTE   ;Send slave address
002E: 744D          54          MOV A,#01001101B;Generate START, set ENI,
                                                ;set ACK
0030: 120005   R    55          CALL SENDCONTR
0033: 22            56          RET
                    57  ;
                    58  ;STOP will generate a STOP condition and set the
                        ;I2C_END bit
0034: 74C3          59  STOP:   MOV A,#11000011B
```

```
0036: 120005   R    60          CALL SENDCONTR  ;Send STOP condition
0039: D200     R    61          SETB I2C_END    ;Set I2C_END bit
003B: 22            62          RET
                    63  ;
                    64  ;I2C_init does the initialization of the PCD8584
003C:               65  I2C_INIT:
                    66  ;Write own slave address
003C: E4            67          CLR A
003D: 120005   R    68          CALL SENDCONTR  ;Write to control register
0040: 7400     R    69          MOV A,#SLAVE_ADR
0042: 120000   R    70          CALL SENDBYTE    ;Write to own slave
                                                 ;register
                    71  ;Write clock register
0045: 7420          72          MOV A,#20H
0047: 120005   R    73          CALL SENDCONTR  ;Write to control register
004A: 7400     R    74          MOV A,#I2C_CLOCK
004C: 120000   R    75          CALL SENDBYTE   ;Write to clock register
004F: 22            76          RET
                    77  ;
0050:               78          END
```

```
ASM51  TSW  ASSEMBLER   I2C INTERRUPT ROUTINE

LOC   OBJ         LINE  SOURCE

                     1  $TITLE (I2C INTERRUPT ROUTINE)
                     2  $PAGELENGTH(40)
                     3  ;
                     4          PUBLIC INT0_SRV
                     5          PUBLIC DIR,I2C_END
                     6          PUBLIC BASE,NR_BYTES,IIC_CNT,SLAVE
                     7          EXTRN  CODE(SENDBYTE,SENDCONTR,STOP)
                                EXTRN  CODE(READBYTE,READCONTR)
                     8  ;
                     9  ;Define variables in RAM
                    10  IIC_VAR SEGMENT DATA
----                11          RSEG IIC_VAR
0000:          R    12  BASE:   DS 1            ;Pointer to I2C table (till
                                                ;256)
0001:               13  NR_BYTES: DS 1          ;Number of bytes to rcv/trm
0002:               14  IIC_CNT:DS 1            ;I2C byte counter
0003:               15  SLAVE:  DS 1            ;Slave address after START
                    16  ;
                    17  ;Define variable segment
                    18  BIT_VAR SEGMENT DATA BITADDRESSABLE
----                19          RSEG BIT_VAR
0000:          R    20  STATUS: DS 1            ;Byte with flags
0000           R    21  I2C_END BIT STATUS.0    ;Defines if a I2C
                                                ;transmission is finished
                    22                          ;'1' is finished
                    23                          ;'0' is not ready
0000           R    24  DIR     BIT STATUS.3    ;Defines direction of I2C
                                                ;transmission
                    25                          ;'1':Transmit    '0':Receive
                    26  ;
                    27  ;Define code segment for routine
                    28  IIC_INT SEGMENT CODE PAGE
----                29          RSEG IIC_INT
                    30  ;
                    31  ;Program uses registers in RB1
                    32          USING 1
                    33  ;
0000:          R    34  INT0_SRV:
0000: C0E0          35          PUSH ACC        ;Save acc. en psw on stack
0002: C0D0          36          PUSH PSW
0004: 75D008        37          MOV PSW,#08H    ;Select register bank 1
0007: 300016   R    38          JNB DIR,RECEIVE ;Test direction bit
                    39                          ;8584 is MST/TRM
                    40
                    41  ;Program part to transmit bytes to IIC bus
000A: E502     R    42          MOV A,IIC_CNT   ;Compare IIC_CNT and
                                                ;NR_BYTES
000C: B50105   R    43          CJNE A,NR_BYTES,PROCEED
000F: 120000   R    44          CALL STOP       ;All bytes transmitted
0012: 8032          45          JMP EXIT
0014: A800     R    46  PROCEED:MOV R0,BASE     ;RAM pointer
0016: E6            47          MOV A,@R0       ;Source is internal RAM
0017: 0500     R    48          INC BASE        ;Update pointer of table
0019: 120000   R    49          CALL SENDBYTE   ;Send byte to IIC bus
001C: 0502     R    50          INC IIC_CNT     ;Update byte counter
001E: 8026          51          JMP EXIT
                    52  ;
                    53  ;
                    54  ;Program to receive byte from IIC bus
0020:               55  RECEIVE:
0020: E502     R    56          MOV A,IIC_CNT   ;Test if last byte is to be
                                                ;received
0022: 04            57          INC A
```

```
0023: 04            58          INC A
0024: B50105   R    59          CJNE A,NR_BYTES,PROC_RD
0027: 7448          60          MOV A,#01001000B;Last byte to be received.
                                                ;Disable ACK
0029: 120000   R    61          CALL SENDCONTR  ;Write control word to
                                                ;PCD8584
002C: 120000   R    62  PROC_RD:CALL READBYTE   ;Read I2C byte
002F: FC            63          MOV R4,A        ;Save accu
                    64  ;If RECEIVE is entered after the transmission of
                    65  ;START+address then the result of READBYTE is not
                    66  ;relevant. READBYTE is used to start the generation
                        ;of the clock pulses for the next byte to read.
                    67  ;This situation occurs when IIC_CNT is 0
0030: E4            68          CLR A           ;Test IIC_CNT
0031: B50202   R    69          CJNE A,IIC_CNT,SAVE
0034: 8006          70          JMP END_TEST    ;START is send. No relevant
                                                ;data in data reg. of 8584
0036: A800     R    71  SAVE:   MOV R0,BASE
0038: EC            72          MOV A,R4        ;Destination is internal RAM
0039: F6            73          MOV @R0,A
003A: 0500     R    74          INC BASE
003C: 0502     R    75  END_TEST:INC IIC_CNT   ;Test if all bytes are
                                                ;received
003E: E501     R    76          MOV A,NR_BYTES
0040: B50203   R    77          CJNE A,IIC_CNT,EXIT
0043: 120000   R    78          CALL STOP       ;All bytes received
                    79  ;
0046: D0D0          80  EXIT:   POP PSW         ;Restore PSW and accu
0048: D0E0          81          POP ACC
004A: 32            82          RETI
                    83  ;
004B:               84          END
```

```
ASM51  TSW  ASSEMBLER   Send a string of bytes to the PCF8577 on OM1016

LOC   OBJ         LINE  SOURCE

                     1  $TITLE (Send a string of bytes to the PCF8577 on
                               OM1016)
                     2  $PAGELENGTH(40)
                     3  ;
                     4  ;This program is an example to transmit bytes via
                        ;PCD8584
                     5  ;to the I2C–bus
                     6  ;
                     7          PUBLIC  SLAVE_ADR,I2C_CLOCK,PCD8584
                     8          EXTRN   CODE(I2C_INIT,INT0_SRV,START)
                     9          EXTRN   BIT(I2C_END,DIR)
                    10          EXTRN   DATA(BASE,NR_BYTES,IIC_CNT,SLAVE)
                    11  ;
                    12  ;
                    13  ;Define used segments
                    14  USER    SEGMENT CODE    ;Segment for user program
                    15  RAMTAB  SEGMENT DATA    ;Segment for table in
                                                ;internal RAM
                    16  RAMVAR  SEGMENT DATA    ;Segment for RAM variables
                                                ;in RAM
                    17  ;
                    18  ;
----                19          RSEG    RAMVAR
0000:          R    20  STACK:  DS 20           ;Reserve stack area
                    21  ;
                    22  ;
----                23          CSEG AT 00H
0000: 020000   R    24          JMP MAIN        ;Reset vector
                    25  ;
                    26  ;
----                27          CSEG AT 03H
0003: 020000   R    28          JMP INT0_SRV    ;I2C interrupt vector
                                                ;(INT0/)
                    29  ;
                    30  ;
----                31          RSEG USER
                    32  ;Define I2C clock, own slave address and PCD8584
                        ;hardware address
0055                33  SLAVE_ADR EQU 55H       ;Own slave address is 55H
001C                34  I2C_CLOCK EQU 00011100B ;12.00MHz/90kHz
0000                35  PCD8584   EQU 0000H     ;PCD8584 address with A0=0
                    36  ;0000: 7581FF   R    37  MAIN:   MOV SP,#STACK–1 ;Initialize stack pointer
                    38  ;Initialize 8031 interrupt registers for I2C
                        ;interrupt
0003: D2A8          39          SETB EX0        ;Enable interrupt INT0/
0005: D2AF          40          SETB EA         ;Set global enable
0007: D2B8          41          SETB PX0        ;Priority level ’1’
0009: D288          42          SETB IT0        ;INT0/ on falling edge
                    43  ;
                    44  ;Initialize PCD8584
000B: 120000   R    45          CALL I2C_INIT
                    46  ;
                    47  ;Make a table in RAM with data to be transmitted.
000E: 120021   R    48          CALL MAKE_TAB
                    49  ;
                    50  ;Set variables to control PCD8584
0011: D200     R    51          SETB DIR        ;DIR=’transmission’
0013: 750000   R    52          MOV BASE,#TABLE ;Start address of I2C–data
0016: 750005   R    53          MOV NR_BYTES,#05H ;5 bytes must be
                                                ;transferred
0019: 750074   R    54          MOV SLAVE,#01110100B ;Slave address PCF8577
                                                ; + WR/
001C: 120000   R    55          CALL START      ;Start I2C transmission
```

```
                    56  ;
                    57  ;
001F: 80FE          58  LOOP:   JMP LOOP        ;Endless loop when program
                                                ;is finished
                    59  ;
                    60  ;
0021:               61  MAKE_TAB:
0021: 7800     R    62          MOV R0,#TABLE   ;Make data ready for I2C
                                                ;transmission
0023: 7600          63          MOV @R0,#00     ;Controlword PCF8577
0025: 08            64          INC R0
0026: 76FC          65          MOV @R0,#0FCH   ;'0'
0028: 08            66          INC R0
0029: 7660          67          MOV @R0,#60H    ;'1'
002B: 08            68          INC R0
002C: 76DA          69          MOV @R0,#0DAH   ;'2'
002E: 08            70          INC R0
002F: 76F2          71          MOV @R0,#0F2H   ;'3'
0031: 22            72          RET
                    73  ;
                    74  ;
----                75          RSEG RAMTAB
0000:          R    76  TABLE:  DS 10           ;Reserve space in internal
                                                ;data RAM
                    77                          ;for I2C data to transmit
                    78  ;
                    79  ;
000A:               80          END
```

```
ASM51  TSW  ASSEMBLER   Receive 2 bytes from the PCF8574P on OM1016

LOC   OBJ         LINE  SOURCE

                     1  $TITLE (Receive 2 bytes from the PCF8574P on OM1016)
                     2  $PAGELENGTH(40)
                     3  ;
                     4  ;This program is an example to receive bytes via
                        ;PCD8584
                     5  ;from the I2C–bus
                     6  ;
                     7          PUBLIC  SLAVE_ADR,I2C_CLOCK,PCD8584
                     8          EXTRN   CODE(I2C_INIT,INT0_SRV,START)
                     9          EXTRN   BIT(I2C_END,DIR)
                    10          EXTRN   DATA(BASE,NR_BYTES,IIC_CNT,SLAVE)
                    11  ;
                    12  ;
                    13  ;Define used segments
                    14  USER    SEGMENT CODE    ;Segment for user program
                    15  RAMTAB  SEGMENT DATA    ;Segment for table in
                                                ;internal RAM
                    16  RAMVAR  SEGMENT DATA    ;Segment for RAM variables
                                                ;in RAM
                    17  ;
                    18  ;
----                19          RSEG    RAMVAR
0000:           R   20  STACK:  DS 20           ;Reserve stack area
                    21  ;
                    22  ;
----                23          CSEG AT 00H
0000: 020000    R   24          JMP MAIN        ;Reset vector
                    25  ;
                    26  ;
----                27          CSEG AT 03H
0003: 020000    R   28          JMP INT0_SRV    ;I2C interrupt vector
                                                ;(INT0/)
                    29  ;
                    30  ;
----                31          RSEG USER
                    32  ;Define I2C clock, own slave address and PCD8584
                        ;hardware address
0055                33  SLAVE_ADR EQU 55H       ;Own slave address is 55H
001C                34  I2C_CLOCK EQU 00011100B ;12.00MHz/90kHz
0000                35  PCD8584   EQU 0000H     ;PCD8584 address with A0=0
                    36  ;0000: 7581FF   R    37  MAIN:   MOV SP,#STACK–1 ;Initialize stack pointer
                    38  ;Initialize 8031 interrupt registers for I2C
                        ;interrupt
0003: D2A8          39          SETB EX0        ;Enable interrupt INT0/
0005: D2AF          40          SETB EA         ;Set global enable
0007: D2B8          41          SETB PX0        ;Priority level ’1’
0009: D288          42          SETB IT0        ;INT0/ on falling edge
                    43  ;
                    44  ;Initialize PCD8584
000B: 120000    R   45          CALL I2C_INIT
                    46  ;
                    47  ;Set variables to control PCD8584
000E: C200      R   48          CLR  DIR        ;DIR=’receive’
0010: 750000    R   49          MOV BASE,#TABLE ;Start address of I2C–data
0013: 750002    R   50          MOV NR_BYTES,#02H ;2 bytes must be received
0016: 75004F    R   51          MOV SLAVE,#01001111B ;Slave address PCF8574
                                                ; + RD
0019: 120000    R   52          CALL START      ;Start I2C transmission
                    53  ;
                    54  ;
001C: 80FE          55  LOOP:   JMP LOOP        ;Endless loop when program
                                                ;is finished
                    56  ;
```

```
                    57  ;
----                58          RSEG RAMTAB
0000:           R   59  TABLE:  DS 10           ;Reserve space in internal
                                                ;data RAM
                    60                          ;for received I2C data
                    61  ;
                    62  ;
000A:               63          END
```

```
ASM51  TSW  ASSEMBLER   Demo program for PCD8584 I2C–routines

LOC   OBJ         LINE  SOURCE

                     1  $TITLE (Demo program for PCD8584 I2C–routines)
                     2  $PAGELENGTH(40)
                     3  ;Program displays on the LCD display  the time (with
                        ;PCF8583). Dots on LCD display blink every second.
                     5  ;On the LED display the values of the successive
                        ;analog input channels are shown.
                     7  ;Program reads analog channels of PCF8591P.
                     8  ;Channel number and channel value are displayed
                        ;successively.
                     9  ;Values are displayed on LCD and LED display on I2C
                        ;demo board.
                    10  ;
                    11          PUBLIC   SLAVE_ADR,I2C_CLOCK,PCD8584
                    12          EXTRN    CODE(I2C_INIT,INT0_SRV,START)
                    13          EXTRN    BIT(I2C_END,DIR)
                    14          EXTRN    DATA(BASE,NR_BYTES,IIC_CNT,SLAVE)
                    15  ;
                    16  ;
                    17  ;Define used segments
                    18  USER    SEGMENT  CODE   ;Segment for user program
                    19  RAMTAB  SEGMENT  DATA   ;Segment for table in
                                                ;internal RAM
                    20  RAMVAR  SEGMENT  DATA   ;Segment for variables
                    21  ;
----                22          RSEG RAMVAR
0000:          R    23  STACK:  DS 20           ;Stack area (20 bytes)
0014:               24  PREVIOUS: DS 1          ;Store for previous seconds
0015:               25  CHANNEL:DS 1            ;Channel number to be
                                                ;sampled
0016:               26  AN_VAL: DS 1            ;Analog value sampled
                                                ;channel
0017:               27  CONVAL: DS 3            ;Converted BCD value sampled
                                                ;channel
                    28  ;
----                29          CSEG AT 00H
0000: 020000   R    30          LJMP MAIN       ;Reset vector
                    31  ;
----                32          CSEG AT 03H     ;INT0/
0003: 020000   R    33          LJMP INT0_SRV   ;Vector I2C–interrupt
                    34  ;
                    35  ;
----                36          RSEG USER37  ;Define I2C clock, own slave address and address for
                        ;main processor
0055                38  SLAVE_ADR EQU 55H       ;Own slaveaddress is 55h
001C                39  I2C_CLOCK EQU 00011100B ;12.00MHz/90kHz
0000                40  PCD8584   EQU 0000H     ;Address of PCD8584. This
                                                ;must be an EVEN number!!
                    41  ;Define addresses of I2C peripherals
00A3                42  PCF8583R  EQU 10100011B ;Address PCF8583 with Read
                                                ;active
00A2                43  PCF8583W  EQU 10100010B ;Address PCF8583 with Write
                                                ;active
009F                44  PCF8591R  EQU 10011111B ;Address PCF8591 with Read
                                                ;active
009E                45  PCF8591W  EQU 10011110B ;Address PCF8591 with Write
                                                ;active
0074                46  PCF8577W  EQU 01110100B ;Address PCF8577 with Write
                                                ;active
0076                47  SAA1064W  EQU 01110110B ;Address SAA1064 with Write
                                                ;active
                    48  ;
0000: 7581FF   R    49  MAIN:   MOV SP,#STACK–1 ;Define stack pointer
```

```
ASM51  TSW  ASSEMBLER   Demo program for PCD8584 I2C–routines

LOC   OBJ          LINE  SOURCE

                     50  ;Initialize 80C31 interrupt registers for I2C
                         ;interrupt (INT0/)
0003: D2A8           51          SETB EX0        ;Enable interrupt INT0/
0005: D2AF           52          SETB EA         ;Set global enable
0007: D2B8           53          SETB PX0        ;Priority level is '1'
0009: D288           54          SETB IT0        ;INT0/ on falling edge
                     55  ;Initialize PCD8584
000B: 120000   R     56          CALL I2C_INIT
                     57  ;
000E: 751500   R     58          MOV CHANNEL,#00 ;Set AD–channel
                     59  ;
                     60  ;Time must be read from PCD8583.
                     61  ;First write word address and control register of
                         ;PCD8583.
0011: D200     R     62          SETB DIR        ;DIR='transmission'
0013: 750000   R     63          MOV BASE,#TABLE ;Start address I2C data
0016: 750002   R     64          MOV NR_BYTES,#02H ;Send 2 bytes
0019: 7500A2   R     65          MOV SLAVE,#PCF8583W
001C: E4             66          CLR A
001D: F500     R     67          MOV TABLE,A     ;Data to be sent (word
                                                 ;address).
001F: F501     R     68          MOV TABLE+1,A   ;      "         (control
                                                 ;byte)
0021: 120000   R     69          CALL START      ;Start transmission.
0024: 3000FD   R     70  FIN_1:  JNB I2C_END,FIN_1 ;Wait till transmission
                                                 ;finished
                     71  ;Send word address before reading time
0027: D200     R     72  REPEAT: SETB DIR        ;'transmission
0029: 750000   R     73          MOV BASE,#TABLE ;I2C data
002C: 7500A2   R     74          MOV SLAVE,#PCF8583W
002F: 7401           75          MOV A,#01
0031: F500     R     76          MOV NR_BYTES,A  ;Send 1 byte
0033: F500     R     77          MOV TABLE,A     ;Data to be sent is '1'
0035: 120000   R     78          CALL START      ;Start I2C transmission
0038: 3000FD   R     79  FIN_2:  JNB I2C_END,FIN_2 ;Wait till transmission
                                                 ;finished
                     80  ;
                     81  ;Time can now be read from PCD8583. Data read is
                     82  ;hundredths of sec's, sec's, min's and hr's
003B: C200     R     83          CLR DIR         ;DIR='receive'
003D: 750000   R     84          MOV BASE,#TABLE ;I2C table
0040: 750004   R     85          MOV NR_BYTES,#04; 4 bytes to receive
0043: 7500A3   R     86          MOV SLAVE,#PCF8583R
0046: 120000   R     87          CALL START      ;Start I2C reception
0049: 3000FD   R     88  FIN_3:  JNB I2C_END,FIN_3 ;Wait till finished
                     89  ;
                     90  ;Transfer data to R2...R5
004C: 7800     R     91          MOV R0,#TABLE   ;Set pointers
004E: 7902           92          MOV R1,#02H     ;Pointer R2
0050: E6             93  TRANSFER:MOV A,@R0
0051: F7             94          MOV @R1,A
0052: 08             95          INC R0
0053: 09             96          INC R1
0054: D500F9   R     97          DJNZ NR_BYTES,TRANSFER
0057: ED             98          MOV A,R5        ;Mask of hour counter
0058: 543F           99          ANL A,#3FH
005A: FD            100          MOV R5,A
                    101  ;
                    102  ;Data must now be displayed on LCD display.
                    103  ;First minutes and hours (in R4 and R5) must be
                    104  ;converted from BCD to LCD segment data.The segment
                         ;data
                    105  ;will be transferred to TABLE. R0 is pointer to table
```

```
ASM51  TSW  ASSEMBLER   Demo program for PCD8584 I2C–routines

LOC   OBJ          LINE  SOURCE

005B: 7800     R   106          MOV R0,#TABLE
005D: 7600         107          MOV @R0,#00H    ;Control word for PCF8577
005F: 08           108          INC R0 0060: 120080   R   109          CALL CONV
                   110  ;
                   111  ;Switch on dp between hours and minutes
0063: 430301   R   112          ORL TABLE+3,#01H
                   113  ;If lsb of seconds is '0' then switch on dp.
0066: EB           114          MOV A,R3        ;Get seconds
0067: 13           115          RRC A           ;lsb in carry
0068: 4003         116          JC PROCEED
006A: 430101   R   117          ORL TABLE+1,#01H;switch on dp
                   118  ;
                   119  ;Now the time (hours,minutes) can be displayed on
                        ;the LCD
006D:              120  PROCEED:
006D: D200     R   121          SETB DIR        ;Direction 'transmit'
006F: 750000   R   122          MOV BASE,#TABLE
0072: 750005   R   123          MOV NR_BYTES,#05H
0075: 750074   R   124          MOV SLAVE,#PCF8577W
0078: 120000   R   125          CALL START      ;Start transmission
                   126  ;
007B: 3000FD   R   127  FIN_4:  JNB I2C_END,FIN_4
007E: 8026         128          JMP ADCON       ;Proceed with AD–conversion
                                                ;part
                   129  ;
                   130 ;*************************************************************
                   131  ;Routines used by clock part of demo
                   132  ;
                   133  ;CONV converts hour and minute data to LCD data and
                        ;stores
                   134  ;it in TABLE.
0080: 90009C   R   135  CONV:   MOV DPTR,#LCD_TAB ;Base for LCD segment
                                                ;table
0083: ED           136          MOV A,R5        ;Hours to accu
0084: C4           137          SWAP A          ;Swap nibbles
0085: 120096   R   138          CALL LCD_DATA   ;Convert 10's hours to LCD
                                                ;data in table
0088: ED           139          MOV A,R5        ;Get hours
0089: 120096   R   140          CALL LCD_DATA
008C: EC           141          MOV A,R4        ;Get minutes
008D: C4           142          SWAP A
008E: 120096   R   143          CALL LCD_DATA   ;Convert 10's minutes
0091: EC           144          MOV A,R4
0092: 120096   R   145          CALL LCD_DATA   ;Convert minutes
0095: 22           146          RET
                   147  ;
                   148  ;LCD_DATA gets data from segment table and stores it
                        ;in TABLE
0096: 540F         149  LCD_DATA:ANL A,#0FH     ;Mask off LS–nibble
0098: 93           150          MOVC A,@A+DPTR  ;Get LCD segment data
0099: F6           151          MOV @R0,A       ;Save data in table
009A: 08           152          INC R0
009B: 22           153          RET
                   154  ;
                   155  ;LCD_TAB is conversion table for LCD
009C:              156  LCD_TAB:
009C: FC60DA       157          DB 0FCH,60H,0DAH; '0','1','2'
009F: F266B6       158          DB 0F2H,66H,0B6H; '3','4','5'
00A2: 3EE0FE       159          DB 3EH,0E0H,0FEH; '6','7','8'
00A5: E6           160          DB 0E6H         ; '9'
                   161  ;
```

```
ASM51  TSW  ASSEMBLER   Demo program for PCD8584 I2C–routines

LOC   OBJ          LINE  SOURCE


                    162 ;*******************************************************************
                    163  ;
                    164  ;
                    165  ;These part of the program reads an analog
                         ;input–channel.
                    166  ;Displaying is done on the LED–display
                    167  ;On odd–seconds the channel number will be
                         ;displayed.
                    168  ;On even–seconds the analog value of this channel is
                         ;displayed
                    169  ;Then the next channel is displayed.
                    170  ;
00A6: EB            171  ADCON:  MOV A,R3        ;Get seconds
00A7: 13            172          RRC A          ;lsb to carry
00A8: 503C          173          JNC NEW_MEAS   ;Even seconds; do a
                                                 ;measurement on the current
                                                 ;channel
                    174  ;
                    175  ;Display and/or update channel
00AA: 33            176          RLC A          ;Restore accu
00AB: B51402   R    177          CJNE A,PREVIOUS,NEW_CH ;If new seconds,
                                                 ;update channel number
00AE: 800A          178          JMP DISP_CH
00B0: 0515     R    179  NEW_CH: INC CHANNEL
00B2: E515     R    180          MOV A,CHANNEL  ;If channel=4 then
                                                 ;channel:=0
00B4: B40403        181          CJNE A,#04,DISP_CH
00B7: 751500   R    182          MOV CHANNEL,#00
00BA: 8B14     R    183  DISP_CH:MOV PREVIOUS,R3 ;Update previous seconds
00BC: E515     R    184          MOV A,CHANNEL  ;Get segment value of
                                                 ;channel
00BE: 900193   R    185          MOV DPTR,#LED_TAB
00C1: 93            186          MOVC A,@A+DPTR
                    187  ;
00C2: 7800     R    188          MOV R0,#TABLE  ;Fill table with I2C data
00C4: 7600          189          MOV @R0,#00    ;SAA1064 instruction byte
00C6: 08            190          INC R0
00C7: 7677          191          MOV @R0,#77H   ;SAA1064 control byte
00C9: 08            192          INC R0
00CA: F6            193          MOV @R0,A      ;Channel number
00CB: E4            194          CLR A
00CC: 08            195          INC R0
00CD: F6            196          MOV @R0,A      ;Second digit
00CE: 08            197          INC R0
00CF: F6            198          MOV @R0,A      ;Third digit
00D0: 08            199          INC R0
00D1: F6            200          MOV @R0,A      ;Fourth byte
                    201  ;
00D2: D200     R    202          SETB DIR       ;I2C transmission of channel
                                                 ;number
00D4: 750000   R    203          MOV BASE,#TABLE
00D7: 750006   R    204          MOV NR_BYTES,#06H
00DA: 750076   R    205          MOV SLAVE,#SAA1064W
00DD: 120000   R    206          CALL START
                    207  ;
00E0: 3000FD   R    208  FIN_5:  JNB I2C_END,FIN_5
00E3: 020027   R    209          JMP REPEAT     ; Repeat clock and AD cycle
                                                 ; again
                    210  ;
                    211  ;
```

```
ASM51  TSW  ASSEMBLER   Demo program for PCD8584 I2C-routines

LOC   OBJ          LINE  SOURCE

                    212  ;Measure and display the value of an AD-channel
00E6: 120108   R    213  NEW_MEAS: CALL AD_VAL   ;Do measurement
                    214  ;Wait till values are available
00E9: 3000FD   R    215  FIN_6:  JNB I2C_END,FIN_6
                    216  ;Relevant byte in TABLE+1. Transfer to AN_VAL
00EC: 7801     R    217          MOV R0,#TABLE+1
00EE: 8616     R    218          MOV AN_VAL,@R0
00F0: E516     R    219          MOV A,AN_VAL    ;Channel value in accu for
                                                ;conversion
                    220  ;AN_VAL is converted to BCD value of the measured
                         ;voltage.
                    221  ;Input value for CONVERT in accu
                    222  ;Address for MSByte in R1
00F2: 7917     R    223          MOV R1,#CONVAL
00F4: 120154   R    224          CALL CONVERT
                    225  ;Convert 3 bytes of CONVAL to LED-segments
00F7: 900193   R    226          MOV DPTR,#LED_TAB ;Base of segment table
00FA: 7817     R    227          MOV R0,#CONVAL
00FC: 12018A   R    228          CALL SEG_LOOP
                    229  ;Display value of channel to LED display
00FF: 12012C   R    230          CALL LED_DISP
0102: 3000FD   R    231  FIN_8:  JNB I2C_END,FIN_8 ;Wait till I2C
                                                ;transmission is ended
0105: 020027   R    232          JMP REPEAT      ;Repeat clock and AD cycle
                    233  ;
                    234 ;*************************************************************
                    235  ;Routines used for AD converter.
                    236  ;
                    237  ;AIN reads an analog values from channel denoted by
                         ;CHANNEL.
                    238  ;Send controlbyte:
0108: D200     R    239  AD_VAL: SETB DIR        ;I2C transmission
010A: 7800     R    240          MOV R0,#TABLE   ;Define control word
010C: A615     R    241          MOV @R0,CHANNEL
010E: 750000   R    242          MOV BASE,#TABLE ;Set base at table
0111: 750001   R    243          MOV NR_BYTES,#01H ;Number of bytes to be
                                                ;send
0114: 75009E   R    244          MOV SLAVE,#PCF8591W ;Slave address PCF8591
0117: 120000   R    245          CALL START      ;Start transmission of
                                                ;controlword
011A: 3000FD   R    246  FIN_7:  JNB I2C_END,FIN_7 ;Wait until transmission is
                                                ;finished
                    247  ;Read 2 data bytes from AD-converter
                    248  ;First data byte is from previous conversion and not
                    249  ;relevant
011D: C200     R    250          CLR DIR         ;I2C reception
011F: 750000   R    251          MOV BASE,#TABLE ;Bytes must be stored in
                                                ;TABLE
0122: 750002   R    252          MOV NR_BYTES,#02H; Receive 3 bytes
0125: 75009F   R    253          MOV SLAVE,#PCF8591R ;Slave address PCF8591
0128: 120000   R    254          CALL START
012B: 22            255          RET
                    256  ;
                    257  ;LED_DISP displays the data of 3 bytes from address
                         ;CONVAL
012C:               258  LED_DISP:
012C: 431780   R    259          ORL CONVAL,#80H ;Set decimal point
012F: 7800     R    260          MOV R0,#TABLE
0131: 7917     R    261          MOV R1,#CONVAL
0133: 7600          262          MOV @R0,#00     ;SAA1064 instruction byte
0135: 08            263          INC R0
```

```
ASM51  TSW  ASSEMBLER   Demo program for PCD8584 I2C–routines

LOC   OBJ          LINE  SOURCE

0136: 7677         264          MOV @R0,#01110111B ;SAA1064 control byte
0138: 08           265          INC R0
0139: 7600         266          MOV @R0,#00     ;First LED digit
013B: 08           267          INC R0
013C: 120185   R   268          CALL GETBY      ;Second digit
013F: 120185   R   269          CALL GETBY      ;Third digit
0142: 120185   R   270          CALL GETBY      ;Fourth digit
0145: D200     R   271          SETB DIR        ;I2C transmission
0147: 750000   R   272          MOV BASE,#TABLE
014A: 750006   R   273          MOV NR_BYTES,#06
014D: 750076   R   274          MOV SLAVE,#01110110B
0150: 120000   R   275          CALL START      ;Start I2C transmission
0153: 22           276          RET
                   277  ;
                   278  ;CONVERT calculates the voltage of the analog value.
                   279  ;Analog value must be in accu
                   280  ;BCD result (3 bytes) is stored from address stored
                        ;in R1
                   281  ;Calculation: AN_VAL*(5/256)
0154: 75F005       282  CONVERT:MOV B,#05
0157: A4           283          MUL AB
                   284  ;b2..b0 of reg. B : 2E+2..2E0
                   285  ;b7..b0 of accu   : 2E–1..2E–8
0158: A7F0         286          MOV @R1,B       ;Store MSB (10E0–units)
015A: 09           287          INC R1
 015B: 7700         288           MOV @R1,#00     ;Calculate 10E–1 unit
                                                 ;(10E–1 is 19h)
015D: B41C02       289  TEN_CH: CJNE A,#19H+03H,V1  ;Check if accu <= 0.11
0160: 8002         290          JMP TENS        ;accu=0.11; update tens
0162: 4006         291  V1:     JC NX_CON       ;accu<0.11; update hundreds
0164: C3           292  TENS:   CLR C           ;Calculate new value
0165: 9419         293          SUBB A,#19H
0167: 07           294          INC @R1         ;Update BCD byte
0168: 80F3         295          JMP TEN_CH
                   296  ;Correction may be necessary. With 8 bits '0.1' is
                        ;in fact 0.0976.
                   297  ;A digit of '0A' may appear. Correct this by
                        ;decrementing the digit.
                   298  ;The intermediate result result must be corrected
                        ;with 10*(0.1–0.0976)
                   299  ;This is 06H
016A: B70A03       300  NX_CON: CJNE @R1,#0AH,PROC_CON ; If digit is '0A'
                                                 ;then correct
016D: 17           301          DEC @R1
016E: 2419         302          ADD A,#19H
0170: 09           303  PROC_CON:INC R1
0171: 7700         304          MOV @R1,#00     ;Calculate 10E–2 units
0173: B40302       305  HUND:   CJNE A,#03H,V2  ;Check if accu <= 10E–2
0176: 8002         306          JMP HUNS        ;accu=10E–2; update hundreds
0178: 4006         307  V2:     JC FINISH       ;accu<10E–2; conversion
                                                 ;finished
017A: C3           308  HUNS:   CLR C           ;Calculate new value
017B: 9403         309          SUBB A,#03H
017D: 07           310          INC @R1         ;Update BCD byte
017E: 80F3         311          JMP HUND
0180: B70A01       312  FINISH: CJNE @R1,#0AH,FIN ;Check if result is '0A'.
                                                 ;Then correct.
0183: 17           313          DEC @R1
0184: 22           314  FIN:    RET
                   315  ;
                   316  ;CALLBY transfers byte from @R1 to @R0
0185: E7           317  GETBY:  MOV A,@R1
0186: F6           318          MOV @R0,A
```

```
ASM51  TSW  ASSEMBLER   Demo program for PCD8584 I2C–routines

LOC   OBJ          LINE  SOURCE

0187: 08           319          INC R0
0188: 09           320          INC R1
0189: 22           321          RET
                   322  ;
                   323  ;SEG_LOOP converts 3 values to segment values.
                   324  ;R0 contains address of source and destination
                   325  ;DPTR contains base of table
018A: 7903         326  SEG_LOOP: MOV R1,#03    ;Loop counter
018C: E6           327  INLOOP: MOV A,@R0     ;Get value to be displayed
018D: 93           328          MOVC A,@A+DPTR  ;Get segment value from
                                                ;table
018E: F6           329          MOV @R0,A       ;Store segment data
018F: 08           330          INC R0
0190: D9FA         331          DJNZ R1,INLOOP
0192: 22           332          RET
                   333  ;
                   334  ;
                   335  ;LED_TAB is conversion table for BCD to LED segments
0193:              336  LED_TAB:
0193: 7D483E       337          DB 7DH,48H,3EH  ; '0','1','2'
0196: 6E4B67       338          DB 6EH,4BH,67H  ; '3','4','5'
0199: 734C7F       339          DB 73H,4CH,7FH  ; '6','7','8'
019C: 4F           340          DB 4FH          ; '9'
                   341  ;
                    342 ;*******************************************************
                   343  ;
----               344          RSEG RAMTAB
0000:          R   345  TABLE:  DS 10
                   346  ;
000A:              347          END
```